NOTRE DAME UNIVERSITY

BANGLADESH

EEE Lab Report-08

Course Title: Electronic Devices and Circuits Lab

Course Code: EEE-2108

Experiment No: 08

Name of the Experiment: The Output Characteristics of a BJT under Common Emitter Configuration.

Date of Experiment: 07-10-23

Date of Submission: 12-10-23

Submitted by:

Group: B

Name: Istiak Alam

ID: 0692230005101005

Batch: CSE-20

Submitted To:

Dhiman Roy

Lecturer, NDUB

Experiment No 08

Name of the experiment: The output characteristics of a BJT Under Common Emitter Configuration.

Theory: Unlike the diode, which has two doped regions, a transistor has three doped regions. They are - Emitter, Base and collector. These Three doped regions forms two junctions: One between the emitter & base and other between the collector and the base. Because of these it can be thought as combination of two diodes, the emitter and the base form one diode & the collector & base from another diode. The emitter is ~~hav~~ heavily doped. Its job is to emit or inject free majority carrier into the base. The base is lightly doped and very him. It passes the most of the emitter - injected electron into the collector. The doping level of the collector is between emitter and base.

There are three different currents in a transistor. They are emitter current (I_E), collector current (I_C), base current (I_B) are shown in figure 8.1.

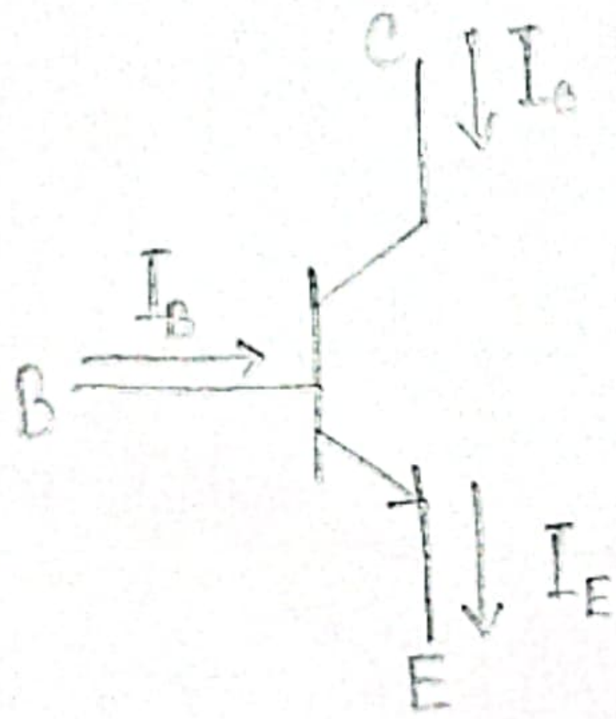

Fig 8.1: Different current in transistor.

Here, $I_E = I_C + I_B$ and the current gain, $\beta = \frac{I_C}{I_B}$

Characteristics curves: The characteristic of a transistor is measured by two characteristics curve. They are as follows-

- Input characteristic curve.
- Output characteristics curve.

Output characteristics is defined by the set of curves between output current (I_C) vs output voltage (V_{CE}) for the constant input current (I_B).

The curve has the following features -

- It has three rigions namely Saturation, Active & Cutoff region
- The rising part of the ~~part~~ curve, where V_{CE} is between 0 and 1 V is called saturation region
- The horizontal region of the graph is called active region.
- When the base current is zero, but there is some collector current. This region curve is known as the cutoff region

Equipment & Components:

(i) BJT — C828/BD135 — 1 peiece

(ii) Resistor — 1kΩ, 470kΩ — 1 piece each

(iii) Trainer Board.

(iv) DC power supply

(v) Digital Multimeter

(vi) Chords and wire as required.

Experimental Setup:

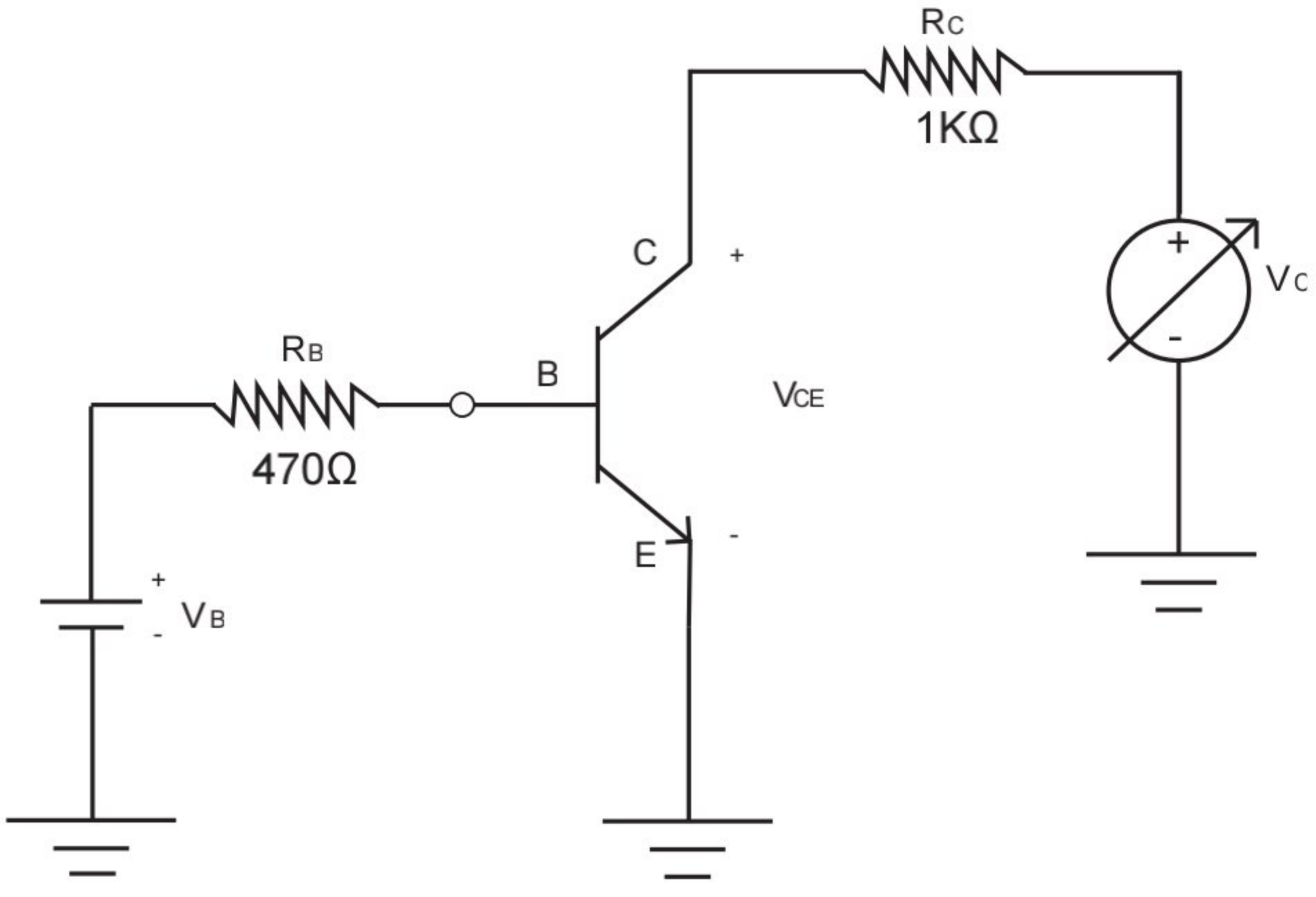

Figure 8.2 : Experimental BJT Circuit Design

Procedures:

1. Connect the circuit as shown in the figure 8.2.

2. Set V_B to a fixed voltage. (3V, 6V, 9V) This will fix I_B.

$$I_B = \frac{V_B - 0.7}{470\Omega} \quad \text{(Theoretically)}$$

$$I_B = \frac{V_{470\Omega}}{470\Omega} \quad \text{(Experimentally)}$$

3. Now vary V_C & measure the voltages of V_{CE} & V_{RC}. And calculate I_C using, $I_C = \frac{V_{RC}}{R_C}$ So that we can fill up the data sheet.

4. Take at least 10 reading by varing the V_C

5. Repeat step 1 to 4 by setting different V_B (3V, 6V, 9V) & complete the table.

Student ID:(20)3,5|(19)3,6,8,9

Group No: B & C

DATA SHEET:

Table 8.1: Measuring current through the BJT (R_C=1kΩ)

Input Voltage of BJT (V_B) (V)	DC Supply Voltage (V_C) (V)	Measured Collector Emitter Voltage (V_{CE}) (V)	Measured Voltage of Collector (V_{RC}) (V)	Calculated Current of Collector $I_C = \frac{V_{RC}}{R_C}$ (A)
3V	0	0.0022	0.0034	0.0000034
	0.1	0.020	0.009	0.000009
	0.1	0.040	0.041	0.000041
	0.2	0.060	0.085	0.000085
	0.3	0.080	0.135	0.000135
	0.5	0.100	0.399	0.000399
	0.8	0.120	0.691	0.000691
	1.2	0.140	0.986	0.000986
	1.4	0.160	1.240	0.001240
	1.7	0.180	1.455	0.001455
	1.9	0.200	1.620	0.001620
	1.9	0.220	1.656	0.001656
	2	0.250	1.670	0.001670
6V	0.2	0.040	0.094	0.000094
	2.1	0.140	1.895	0.001895
	4.1	0.240	3.794	0.003794
	4.2	0.340	3.895	0.003895
	4.4	0.440	3.917	0.003917
	4.5	0.540	3.933	0.003933
	4.6	0.640	3.940	0.003940
	4.7	0.740	3.951	0.003951
	4.8	0.840	3.958	0.003958
	5	0.940	3.945	0.003945
9V	4.0	0.160	3.854	0.003854
	6.2	0.260	5.86	0.005860
	6.4	0.360	6.02	0.006020
	6.5	0.460	6.06	0.006060
	6.6	0.560	6.08	0.006080
	6.8	0.660	6.10	0.006100

Student ID:(20)3,5|(19)3,6,8,9

Group No: B & C

Expected Webforms:

Graph for 3V, 6V, 9V

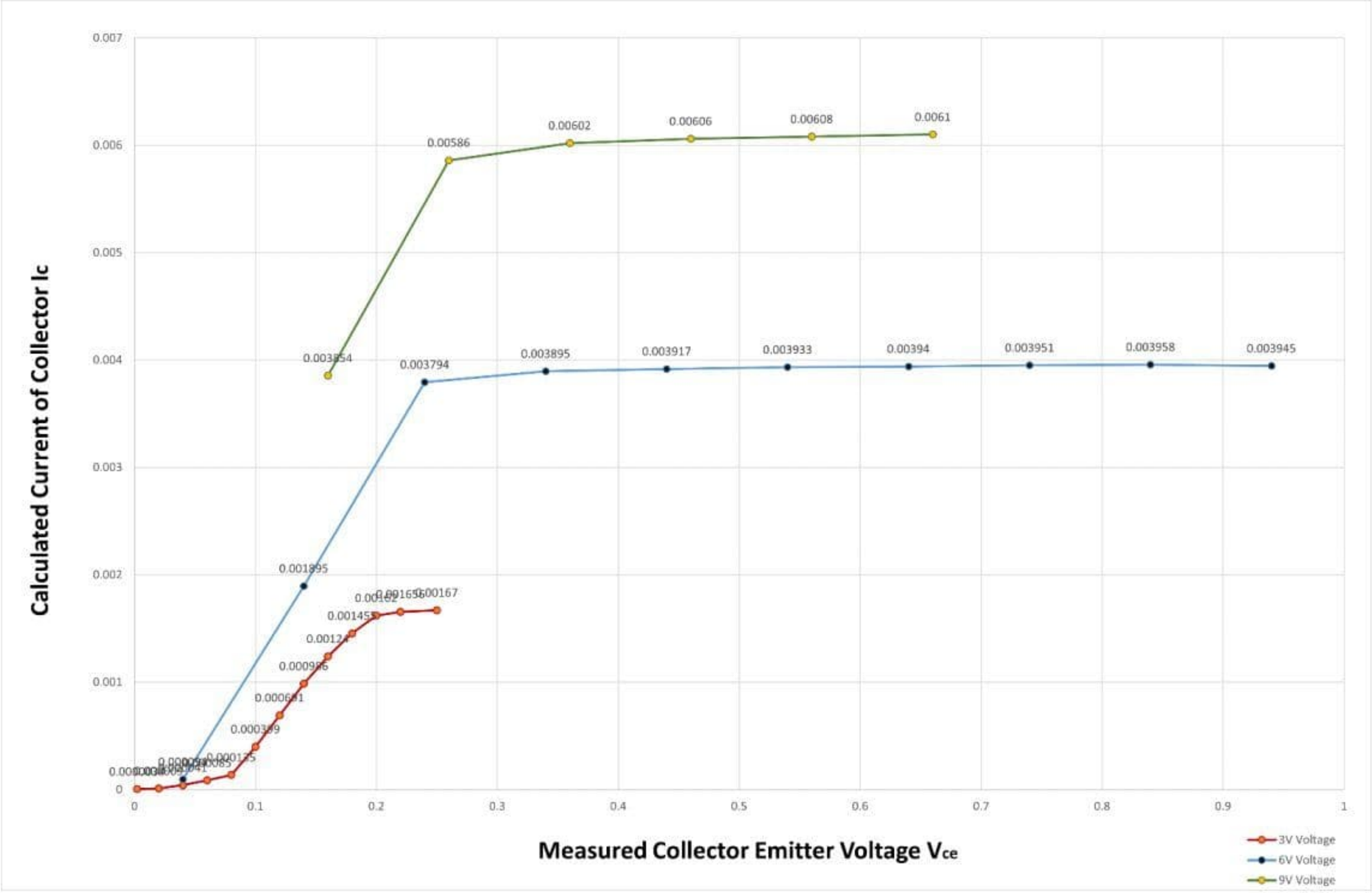

Graph: I_C VS V_{CE}

Discussion:

(i) Use low voltage & current.

(ii) Be careful with reverse voltage to prevent damage

(iii) Measure voltage in parallel & when measuring current, short the circuit.

(iv) Avoid ~~overload~~ overloading & short circuit.

(v) Follow guidelines and manual